Work Order ID 61444

Wednesday, August 25, 2010 10:32:21 AM

Item ID: D2989-043 **Accept** **Setup Start**

Revision ID: **Stop**

Item Name: Basket Lid Assembly

Start Date: 8/25/2010 **Start Qty:** 1.00 **Cust Item ID:**

Required Date: 9/1/2010 **Req'd Qty:** 1.00 **Customer:**

Reference:

Approvals: **Process Plan:** _____ **Date:** 10-8-25 **Tooling:** _____ **Date:** _____ **Run Start**

QC: _____ **Date:** _____ **SPC (Y/N):** _____ **Date:** _____ **Stop**

Sequence ID/ Work Center ID	Operation Description	Set Up/ Run Hours	Tool ID	Tool #	Plan Code	Accept Qty	Reject Qty	Reject Number	Insp. Stamp

Draw Nbr	Revision Nbr
D2989	Rev D

100 — 0.00

Large Fab

Large Fab

Large Fab

Memo 0.00

1- assemble all ribs in DT9446 jig, weld as per dwg D2989
2- tack weld mesh on basket as per dwg D2989 using DT9446 jig
3- to locate hinges and shims use D2989-041, weld as per dwg D2989
A/R ER316 S.S. Rod Batch: M113328

10/09/02 (1x)

110 — QC9- Inspect visual per QSI004- Fusion Welds — 0.00

QC

Quality Control

Memo 0.00

PD 10.09.03

Dart Aerospace Ltd

W/O:		WORK ORDER CHANGES					
DATE	STEP	PROCEDURE CHANGE	By	Date	Qty	Approval Chief Eng / Prod Mgr	Approval QC Inspector

Part No: _____ **PAR #:** _____ **Fault Category:** _____ **NCR:** Yes No **DQA:** _____ **Date:** _____

Resolution: _____ **Disposition:** _____ **QA: N/C Closed:** _____ **Date:** _____

NCR:		WORK ORDER NON-CONFORMANCE (NCR)						
DATE	STEP	Description of NC Section A	Corrective Action Section B			Verification Section C	Approval Chief Eng	Approval QC Inspector
			Initial Chief Eng	Action Description Chief Eng	Sign & Date			

NOTE: Date & initial all entries

H:\FORMS\Quality Assurance\approved QA\NCRWO RevE

Work Order ID 61444

Wednesday, August 25, 2010 10:32:21 AM

Item ID: D2989-043 **Accept** **Setup Start**

Revision ID: **Stop**

Item Name: Basket Lid Assembly

Start Date: 8/25/2010 **Start Qty:** 1.00 **Cust Item ID:**

Required Date: 9/1/2010 **Req'd Qty:** 1.00 **Customer:**

Reference:

Run Start

Approvals: **Process Plan:** _____ **Date:** _____ **Tooling:** _____ **Date:** _____

Stop

QC: _____ **Date:** _____ **SPC (Y/N):** _____ **Date:** _____

Sequence ID/ Work Center ID	Operation Description	Set Up/ Run Hours	Tool ID	Tool #	Plan Code	Accept Qty	Reject Qty	Reject Number	Insp. Stamp
120	QC6- Inspect dimensions to drawing	0.00							
QC	Memo	0.00				1			100508
Quality Control									
125	Pressure Wash per QSI005 4.3	0.00							
HandFinish	Memo	0.00				BR	10-9-7		D.
Hand Finishing									

Dart Aerospace Ltd

W/O:		WORK ORDER CHANGES					
DATE	STEP	PROCEDURE CHANGE	By	Date	Qty	Approval Chief Eng / Prod Mgr	Approval QC Inspector

Part No: _____ **PAR #:** _____ **Fault Category:** _____ **NCR:** Yes No **DQA:** _____ **Date:** _____

Resolution: _____ **Disposition:** _____ **QA: N/C Closed:** _____ **Date:** _____

NCR:		WORK ORDER NON-CONFORMANCE (NCR)						
DATE	STEP	Description of NC Section A	Corrective Action Section B			Verification Section C	Approval Chief Eng	Approval QC Inspector
			Initial Chief Eng	Action Description Chief Eng	Sign & Date			

NOTE: Date & initial all entries

H:\fFORMS\Quality Assurance\approved QA\NCRWO RevE

Work Order ID 61444

Wednesday, August 25, 2010 10:32:21 AM

Item ID: D2989-043 **Accept** **Setup Start**

Revision ID: **Stop**

Item Name: Basket Lid Assembly

Start Date: 8/25/2010 **Start Qty:** 1.00 **Cust Item ID:**

Required Date: 9/1/2010 **Req'd Qty:** 1.00 **Customer:**

Reference:

Approvals: **Process Plan:** _____ **Date:** _____ **Tooling:** _____ **Date:** _____ **Run Start**

QC: _____ **Date:** _____ **SPC (Y/N):** _____ **Date:** _____ **Stop**

Sequence ID/ Work Center ID	Operation Description	Set Up/ Run Hours	Tool ID	Tool #	Plan Code	Accept Qty	Reject Qty	Reject Number	Insp. Stamp
130	White Gloss(Ref:4.3.5.2) per QSI005 4.3-Steel	0.00							
Powdercoat									
	Memo	0.00							
Powder Coating	1- Plug holes prior to powder coating								
	2-Powder Coat White (Ref. 4.3.5.2) D2989-041 as per QSI 005 4.3 & Dwg D2989 M114841								
	1ST COAT START TIME: 1:55 OVEN TEMPERATURE: 400° FINISH TIME: 2:25 ********** 2nd coat if necessary ********** 2ND COAT: START TIME: _____ OVEN TEMPERATURE: _____ FINISH TIME: _____								
140	QC3- Inspect Part Finish	0.00							
QC									
	Memo	0.00							
Quality Control									

① BR 10-9-7.

EJS 10/05/09 ②

Dart Aerospace Ltd

W/O:		WORK ORDER CHANGES					
DATE	STEP	PROCEDURE CHANGE	By	Date	Qty	Approval Chief Eng / Prod Mgr	Approval QC Inspector

Part No: _____ **PAR #:** _____ **Fault Category:** _____ **NCR:** Yes No **DQA:** _____ **Date:** _____

Resolution: _____ **Disposition:** _____ **QA: N/C Closed:** _____ **Date:** _____

NCR:		WORK ORDER NON-CONFORMANCE (NCR)						
DATE	STEP	Description of NC Section A	Corrective Action Section B			Verification Section C	Approval Chief Eng	Approval QC Inspector
			Initial Chief Eng	Action Description Chief Eng	Sign & Date			

NOTE: Date & initial all entries

H:\fFORMS\Quality Assurance\approved QA\NCRWO RevE

Work Order ID 61444

Wednesday, August 25, 2010 10:32:21 AM

Item ID: D2989-043 **Accept** **Setup Start**

Revision ID: **Stop**

Item Name: Basket Lid Assembly

Start Date: 8/25/2010 **Start Qty:** 1.00 **Cust Item ID:**

Required Date: 9/1/2010 **Req'd Qty:** 1.00 **Customer:**

Reference:

Approvals: **Process Plan:** _____ **Date:** _____ **Tooling:** _____ **Date:** _____ **Run Start**

QC: _____ **Date:** _____ **SPC (Y/N):** _____ **Date:** _____ **Stop**

Sequence ID/ Work Center ID	Operation Description	Set Up/ Run Hours	Tool ID	Tool #	Plan Code	Accept Qty	Reject Qty	Reject Number	Insp. Stamp
150	Identify as per dwg & Stock Location: G-A	0.00							
Packaging	W/O 61442								
Packaging	**Memo**	0.00							
									EB 10/09/09
160	QC21- Final Inspection - Work Order Release	0.00							
QC	**Memo**	0.00							
Quality Control									10/09/09

BS 10-9-09

Dart Aerospace Ltd

W/O:		WORK ORDER CHANGES					
DATE	STEP	PROCEDURE CHANGE	By	Date	Qty	Approval Chief Eng / Prod Mgr	Approval QC Inspector

Part No: _____ **PAR #:** _____ **Fault Category:** _____ **NCR:** Yes No **DQA:** _____ **Date:** _____

Resolution: _____ **Disposition:** _____ **QA: N/C Closed:** _____ **Date:** _____

NCR:		WORK ORDER NON-CONFORMANCE (NCR)						
DATE	STEP	Description of NC Section A	Corrective Action Section B			Verification Section C	Approval Chief Eng	Approval QC Inspector
			Initial Chief Eng	Action Description Chief Eng	Sign & Date			

NOTE: Date & initial all entries

H:\FORMS\Quality Assurance\approved QA\NCRWO RevE

Picklist Print

Wednesday, August 25, 2010 10:32:25 AM

3

Work Order ID: 61444

Parent Item: D2989-043

Parent Item Name: Basket Lid Assembly

Start Date: 8/25/2010 **Required Date:** 9/1/2010

Start Qty: 1.00 **Required Qty:** 1.00

Comments:
IPP Rev:I Removed D2989-041 05-11-03 JLM
IPP Rev:J 08-08-29 revC as per dwg DD verified by:EC
IPP Rev:K 08-09-24 plug holes prior to powder coating DD verified by:EC
IPP Rev:L 08-12-02 revD as per dwg DD verified by:

Component Item ID/ Item Name	Replacement Item ID	Mfg/ Purch	Bin Item	Primary Location	Last Location	Route Seq ID	Unit of Measure	Qty on Hand	Qty per Kit	Total Qty	Qty Issued	Date Issued	Status
D2221-1 Rib		Manufactured	No			100	Each	15.0000	1	1	SH 10/08/31		
				Location			**Loc Qty**		**Loc Code**				
				WA			15						
					60172		3						
					61091		12			1			
D2989-3 Rib		Manufactured	No			100	Each	4.0000	1	1	SH 10/08/31		
				Location			**Loc Qty**		**Loc Code**				
				WA			4						
					59006		1						
					59034		1						
					60833		2			1			
D2989-4 Rib		Manufactured	No			100	Each	2.0000	1	1	SH 10/08/31		
				Location			**Loc Qty**		**Loc Code**				
				WA			2						
					60834		2			1			

Dart Aerospace Ltd

W/O:		WORK ORDER CHANGES					
DATE	STEP	PROCEDURE CHANGE	By	Date	Qty	Approval Chief Eng / Prod Mgr	Approval QC Inspector

Part No: _____ **PAR #:** _____ **Fault Category:** _____ **NCR:** Yes No **DQA:** _____ **Date:** _____

Resolution: _____ **Disposition:** _____ **QA: N/C Closed:** _____ **Date:** _____

NCR:		WORK ORDER NON-CONFORMANCE (NCR)						
DATE	STEP	Description of NC Section A	Corrective Action Section B			Verification Section C	Approval Chief Eng	Approval QC Inspector
			Initial Chief Eng	Action Description Chief Eng	Sign & Date			

NOTE: Date & initial all entries

H:\fFORMS\Quality Assurance\approved QA\NCRWO RevE

Picklist Print

Wednesday, August 25, 2010 10:32:25 AM

Work Order ID: 61444

Parent Item: D2989-043

Parent Item Name: Basket Lid Assembly

Start Date: 8/25/2010 **Required Date:** 9/1/2010

Start Qty: 1.00 **Required Qty:** 1.00

D2989-5 Rib	Manufactured	No		100	Each	6.0000	2	2	SG 10/08/31

Location	Loc Qty	Loc Code
ST	2	
60835	2	
WA	4	
61175	4	2

D3182-1 Hinge	Manufactured	No		100	Each	4.0000	2	2	SG 10/08/31

Location	Loc Qty	Loc Code
WA	4	
60836	4	2r

D3442-3 Shim	Manufactured	No		100	Each	8.0000	2	2	~~B603241~~ 1 SG 10/08/31

Location	Loc Qty	Loc Code
WA	8	
60837	4	~~1~~ 2
61176	4	

D3827-041 Rib Assembly (Inboard)	Manufactured	No		100	Each	10.0000	1	1	SG 10/08/31

Location	Loc Qty	Loc Code
ST	4	
60445	4	
WA	6	
61177	6	1

Dart Aerospace Ltd

W/O:		WORK ORDER CHANGES					
DATE	STEP	PROCEDURE CHANGE	By	Date	Qty	Approval Chief Eng / Prod Mgr	Approval QC Inspector

Part No: _____ **PAR #:** _____ **Fault Category:** _____ **NCR:** Yes No **DQA:** _____ **Date:** _____

Resolution: _____ **Disposition:** _____ **QA: N/C Closed:** _____ **Date:** _____

NCR:		WORK ORDER NON-CONFORMANCE (NCR)						
DATE	STEP	Description of NC Section A	Corrective Action Section B			Verification Section C	Approval Chief Eng	Approval QC Inspector
			Initial Chief Eng	Action Description Chief Eng	Sign & Date			

NOTE: Date & initial all entries

H:\fFORMS\Quality Assurance\approved QA\NCRWO RevE

Picklist Print

Wednesday, August 25, 2010 10:32:25 AM

Work Order ID: 61444

Parent Item: D2989-043

Parent Item Name: Basket Lid Assembly

Start Date: 8/25/2010 **Required Date:** 9/1/2010

Start Qty: 1.00 **Required Qty:** 1.00

D3832-5 Mesh (Lid)	Manufactured	No		100	Each	4.0000	1	1	SG 10/09/02

Location	Loc Qty	Loc Code
WA	4	
60131	1	
60671	3	

D3833-5 Mesh (Lid End)	Manufactured	No		100	Each	7.0000	2	2	SG 10/09/02

Location	Loc Qty	Loc Code
WA	7	
53722	1	
60673	6	

D3838-041 Rib Assembly (Basket Lid, LH)	Manufactured	No		100	Each	2.0000	1	1	SG 10/08/31

Location	Loc Qty	Loc Code
WA	2	
61129	2	

D3838-042 Rib Assembly (Basket Lid, RH)	Manufactured	No		100	Each	2.0000	1	1	SG 10/08/31

Location	Loc Qty	Loc Code
WA	2	
61130	2	

Dart Aerospace Ltd

W/O:		WORK ORDER CHANGES					
DATE	STEP	PROCEDURE CHANGE	By	Date	Qty	Approval Chief Eng / Prod Mgr	Approval QC Inspector

Part No: _____ **PAR #:** _____ **Fault Category:** _____ **NCR:** Yes No **DQA:** _____ **Date:** _____

Resolution: _____ **Disposition:** _____ **QA: N/C Closed:** _____ **Date:** _____

NCR:		WORK ORDER NON-CONFORMANCE (NCR)						
DATE	STEP	Description of NC Section A	Corrective Action Section B			Verification Section C	Approval Chief Eng	Approval QC Inspector
			Initial Chief Eng	Action Description Chief Eng	Sign & Date			

NOTE: Date & initial all entries

H:\fFORMS\Quality Assurance\approved QA\NCRWO RevE

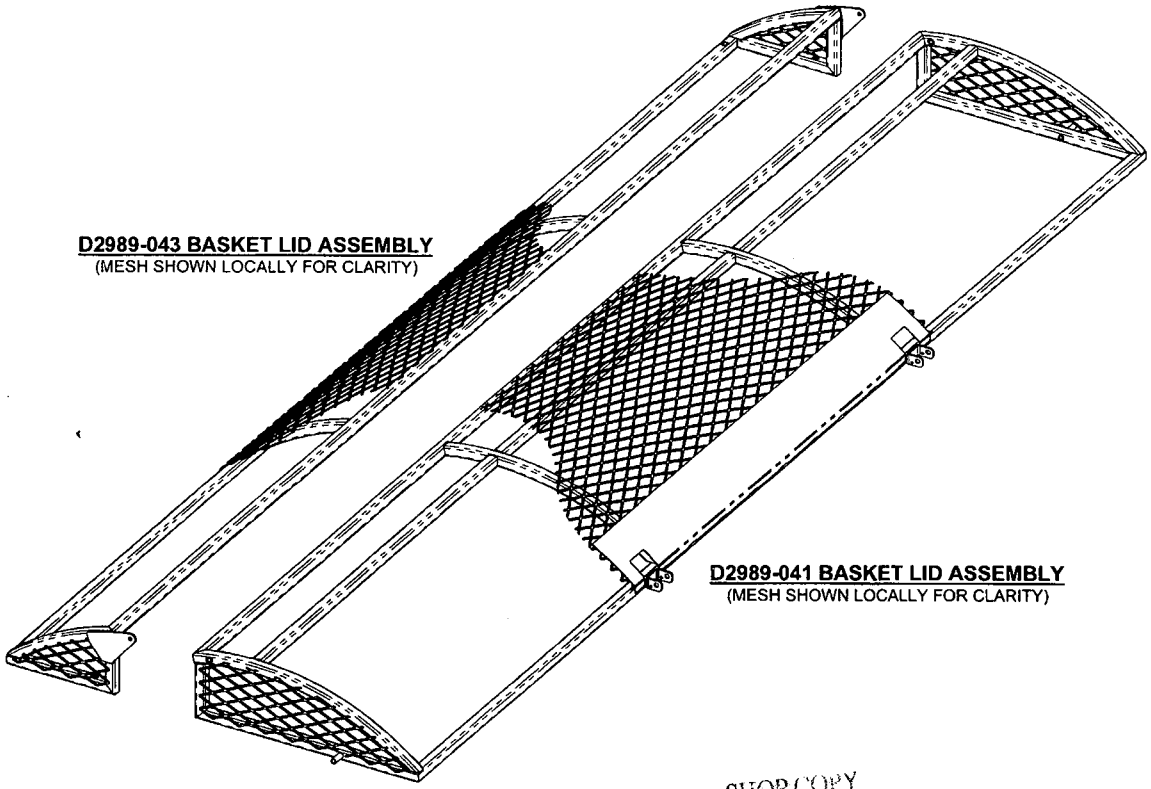

ITEM	QTY -041	QTY -043	P/N	DESCRIPTION
1	X		D2989-041	BASKET LID ASSEMBLY
2		X	D2989-043	BASKET LID ASSEMBLY
3	1		D2506	LABEL PLATE
4	1		D2512-7	RIB
5	2		D2581	MOUNTING BRACKET
6		1	D2989-3	RIB
7		1	D2989-4	RIB
8		2	D2989-5	RIB
9	2		D2989-13	RIB
10	2	1	D2989-17	RIB
11	2		D2989-19	RIB
12		2	D3182-1	HINGE
13		2	D3442-3	SHIM
14		1	D3827-041	RIB ASSY (INBOARD)
15	1		D3832-3	MESH, BASKET LID
16		1	D3832-5	MESH, BASKET LID
17	2		D3833-3	MESH, LID END
18		2	D3833-5	MESH, LID END
19	1		D3836-041	RIB ASSY (BASKET LID, LH)
20	1		D3836-042	RIB ASSY (BASKET LID, RH)
21		1	D3838-041	RIB ASSY (BASKET LID, LH)
22		1	D3838-042	RIB ASSY (BASKET LID, RH)
23	1		D3852-041	RIB ASSEMBLY
24	1		D3852-042	RIB ASSEMBLY

RELEASED 08/11/18

SHOP COPY
RETURN TO
ENGINEERING
UNCONTROLLED COPY
SUBJECT TO ALTERATION
WITHOUT NOTICE
WORK ORDER
NO. 61144
BR 10-6-25

NOTES:
1) MATERIAL: N/A
2) FINISH: POWDER COAT WHITE (4.3.5.2) PER DART QSI 005 4.3
BLACK ANTI-SKID PAINT AS INDICATED PER DART QSI 005 4.4
SPRAY PAINT INSIDE SURFACE BLACK PRIOR TO APPLYING ANTI-SKID
3) TOLERANCES: PER DART QSI 018 UNLESS OTHERWISE NOTED
4) UNITS: INCHES UNLESS OTHERWISE NOTED
5) BREAK SHARP EDGES: 0.005 TO 0.010 MAX
6) IDENTIFICATION: N/A
7) WEIGHT: D2989-041 = 26.50 lbs; D2989-043 = 15.50 lbs
8) WELD PER DART QSI 004

REV.	DESCRIPTION	BY	DATE
D	REVISED -041/-043 PARTS LISTS AND ADDED "ITEM" COLUMN TO PARTS LIST (ZN D3-1); D3836-041 REPLACES D2989-9/-15; D3836-042 REPLACES D2989-10/-15; D3838-041 REPLACES D2989-1/-7; D3838-042 REPLACES D2989-2/-7; D3852-041 REPLACES D2989-11; D3852-042 REPLACES D2989-2; REMOVED D2327-3 (NOW INSTALLED ON D3836 DWG), D2989-9/-10 (NOW ON D3836 DWG), D2989-1/-2/-7/-15 (NOW ON D3838 DWG) AND D2989-11/-12 (NOW ON D3852 DWG). REASON: TO SATISFY "LEAN MANUFACTURING" PROGRAM	MB	08.09.24
C	FRAME MATERIAL WAS 0.060 WALL; MESH MATERIAL UPDATED; DRAWING TRANSFERED TO "B" FORMAT AND CURRENT DRAFTING STANDARD	AJS	08.06.20
B	ADD SHIM UNDER HINGES, UPDATE LID DIMENSIONS	PH	05.06.07
A	NEW ISSUE	DS	00.10.27

DESIGN	DS	**DART AEROSPACE LTD** HAWKESBURY, ONTARIO, CANADA
DRAWN		
CHECKED	AJS	DRAWING NO. D2989 — REV. D — SHEET 1 OF 5
MFG. APPR.		
APPROVED		TITLE: BASKET LID ASSEMBLY — SCALE: NTS
DE APPR.		
DATE	08.09.24	

COPYRIGHT © 2000 BY DART AEROSPACE LTD
THIS DOCUMENT IS PRIVATE AND CONFIDENTIAL AND IS SUPPLIED ON THE EXPRESS CONDITION THAT IT IS NOT TO BE USED FOR ANY PURPOSE OR COPIED OR COMMUNICATED TO ANY OTHER PERSON WITHOUT WRITTEN PERMISSION FROM DART AEROSPACE LTD

Dart Aerospace Ltd

W/O:		WORK ORDER CHANGES					
DATE	STEP	PROCEDURE CHANGE	By	Date	Qty	Approval Chief Eng / Prod Mgr	Approval QC Inspector

Part No: _____ **PAR #:** _____ **Fault Category:** _____ **NCR:** Yes No **DQA:** _____ **Date:** _____

Resolution: _____ **Disposition:** _____ **QA: N/C Closed:** _____ **Date:** _____

NCR:		WORK ORDER NON-CONFORMANCE (NCR)						
DATE	STEP	Description of NC Section A	Corrective Action Section B			Verification Section C	Approval Chief Eng	Approval QC Inspector
			Initial Chief Eng	Action Description Chief Eng	Sign & Date			

NOTE: Date & initial all entries

H:\FORMS\Quality Assurance\approved QA\NCRWO RevE

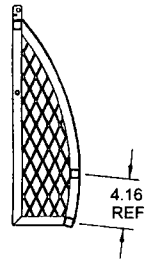

SECTION B-B D7-2

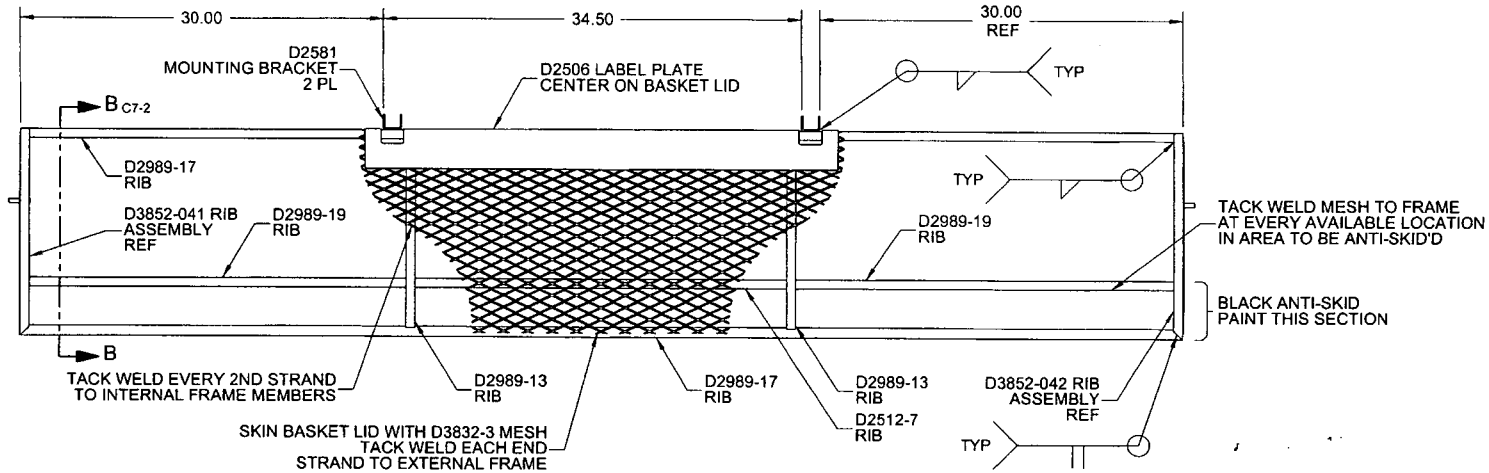

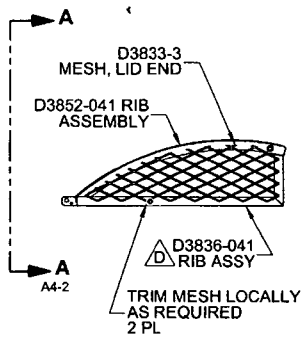

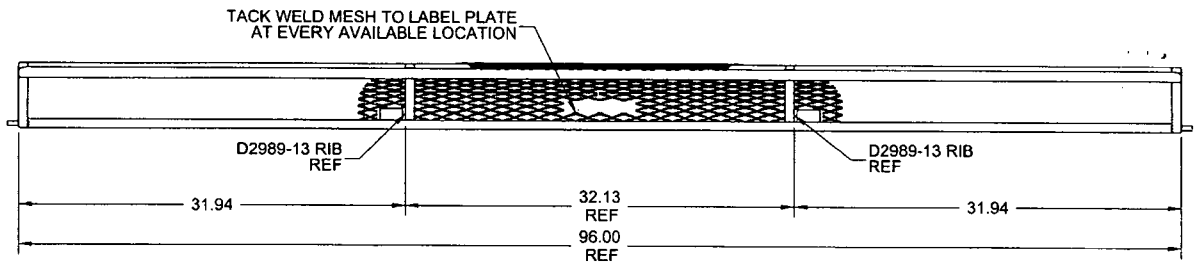

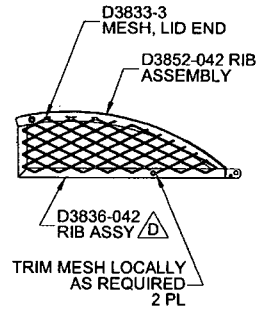

D2989-041 BASKET LID ASSEMBLY
(MESH SHOWN LOCALLY FOR CLARITY)

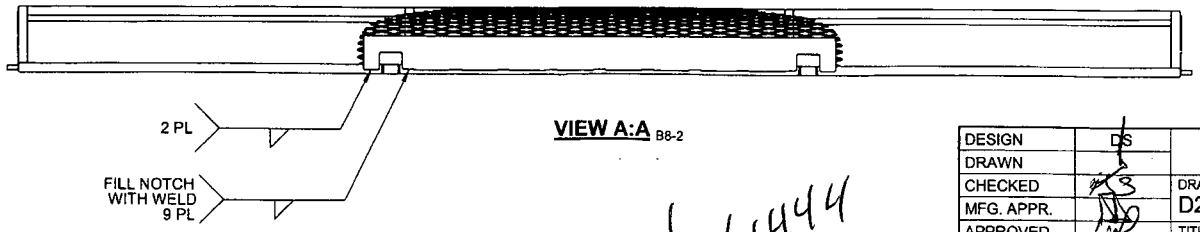

VIEW A:A B8-2

RELEASED 08/11/18

w/o 41444

DESIGN	DS	**DART AEROSPACE LTD** HAWKESBURY, ONTARIO, CANADA
DRAWN		
CHECKED		DRAWING NO. D2989 — REV. D — SHEET 2 OF 5
MFG. APPR.		
APPROVED		TITLE: BASKET LID ASSEMBLY — SCALE: NTS
DE APPR.		
DATE	08.09.24	

COPYRIGHT © 2000 BY DART AEROSPACE LTD
THIS DOCUMENT IS PRIVATE AND CONFIDENTIAL AND IS SUPPLIED ON THE EXPRESS CONDITION THAT IT IS NOT TO BE USED FOR ANY PURPOSE OR COPIED OR COMMUNICATED TO ANY OTHER PERSON WITHOUT WRITTEN PERMISSION FROM DART AEROSPACE LTD

Dart Aerospace Ltd

W/O:		WORK ORDER CHANGES					
DATE	STEP	PROCEDURE CHANGE	By	Date	Qty	Approval Chief Eng / Prod Mgr	Approval QC Inspector

Part No: _____ **PAR #:** _____ **Fault Category:** _____ **NCR:** Yes No **DQA:** _____ **Date:** _____

Resolution: _____ **Disposition:** _____ **QA: N/C Closed:** _____ **Date:** _____

NCR:		WORK ORDER NON-CONFORMANCE (NCR)						
DATE	STEP	Description of NC Section A	Corrective Action Section B			Verification Section C	Approval Chief Eng	Approval QC Inspector
			Initial Chief Eng	Action Description Chief Eng	Sign & Date			

NOTE: Date & initial all entries

H:\FORMS\Quality Assurance\approved QA\NCRWO RevE

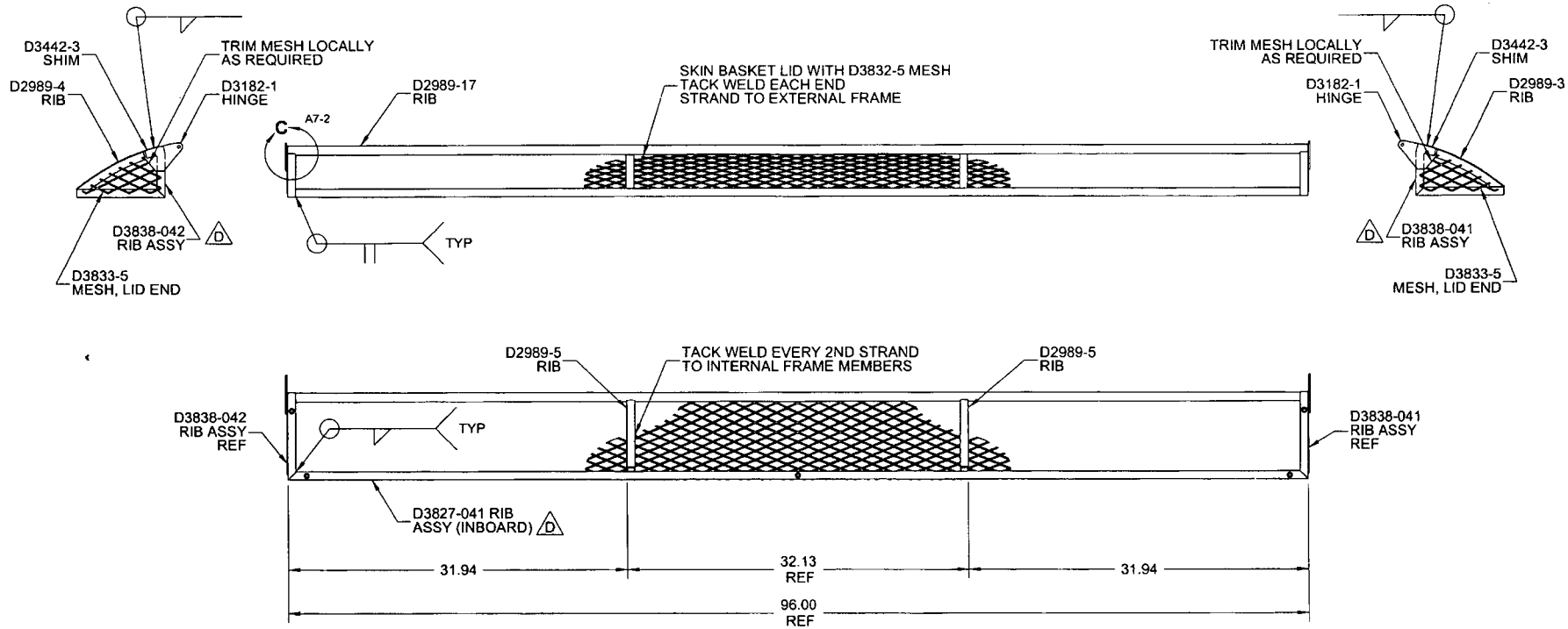

D2989-043 BASKET LID ASSEMBLY
(MESH SHOWN LOCALLY FOR CLARITY)

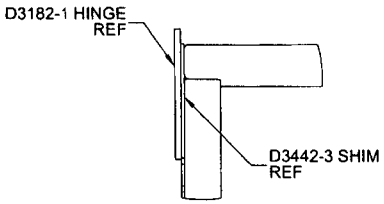

DETAIL C D7-2
TYP. SCALE 4X

RELEASED
08/11/18

w/o 61444

DESIGN	DS	**DART AEROSPACE LTD** HAWKESBURY, ONTARIO, CANADA
DRAWN		
CHECKED		DRAWING NO. D2989 — REV. D — SHEET 3 OF 5
MFG. APPR.		
APPROVED		TITLE: BASKET LID ASSEMBLY — SCALE: NTS
DE APPR.		
DATE	08.09.24	

COPYRIGHT © 2000 BY DART AEROSPACE LTD
THIS DOCUMENT IS PRIVATE AND CONFIDENTIAL AND IS SUPPLIED ON THE EXPRESS CONDITION THAT IT IS NOT TO BE USED FOR ANY PURPOSE OR COPIED OR COMMUNICATED TO ANY OTHER PERSON WITHOUT WRITTEN PERMISSION FROM DART AEROSPACE LTD

Dart Aerospace Ltd

W/O:		WORK ORDER CHANGES					
DATE	STEP	PROCEDURE CHANGE	By	Date	Qty	Approval Chief Eng / Prod Mgr	Approval QC Inspector

Part No: _____ **PAR #:** _____ **Fault Category:** _____ **NCR:** Yes No **DQA:** _____ **Date:** _____

Resolution: _____ **Disposition:** _____ **QA: N/C Closed:** _____ **Date:** _____

NCR:		WORK ORDER NON-CONFORMANCE (NCR)						
DATE	STEP	Description of NC Section A	Corrective Action Section B			Verification Section C	Approval Chief Eng	Approval QC Inspector
			Initial Chief Eng	Action Description Chief Eng	Sign & Date			

NOTE: Date & initial all entries

H:\fFORMS\Quality Assurance\approved QA\NCRWO RevE

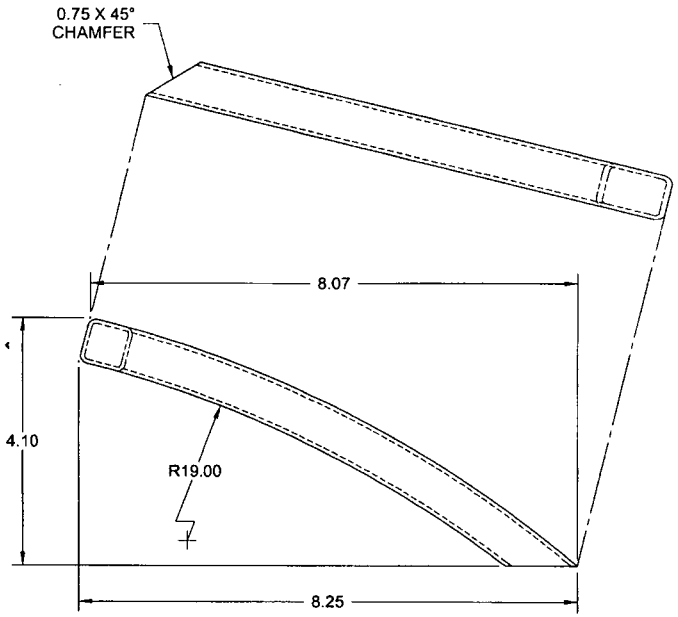

D2989-3 RIB

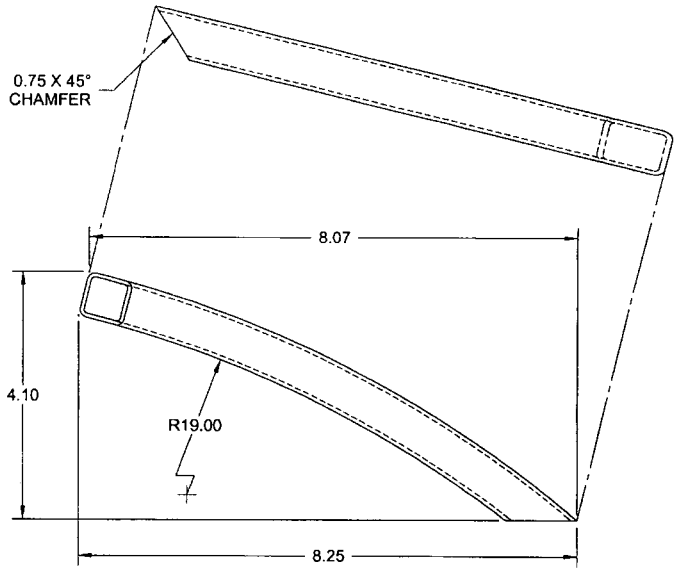

D2989-4 RIB

w/o 61444

RELEASED 08/11/18

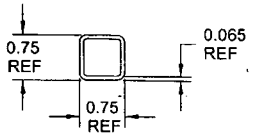

TYPICAL SECTION VIEW

NOTES:
1) MATERIAL: D3166-3 BASKET HOOP
2) FINISH: NONE
3) TOLERANCES: PER DART QSI 018 UNLESS OTHERWISE NOTED
4) UNITS: INCHES UNLESS OTHERWISE NOTED
5) BREAK SHARP EDGES: 0.005 TO 0.010 MAX
6) IDENTIFICATION: N/A
8) WEIGHT: D2989-3/-4 = 0.39 lbs;

DESIGN	DS	**DART AEROSPACE LTD** HAWKESBURY, ONTARIO, CANADA
DRAWN		
CHECKED		DRAWING NO. D2989 — REV. D — SHEET 4 OF 5
MFG. APPR.		
APPROVED		TITLE: BASKET LID ASSEMBLY — SCALE: NTS
DE APPR.		
DATE	08.09.24	

COPYRIGHT © 2000 BY DART AEROSPACE LTD
THIS DOCUMENT IS PRIVATE AND CONFIDENTIAL AND IS SUPPLIED ON THE EXPRESS CONDITION THAT IT IS NOT TO BE USED FOR ANY PURPOSE OR COPIED OR COMMUNICATED TO ANY OTHER PERSON WITHOUT WRITTEN PERMISSION FROM DART AEROSPACE LTD

Dart Aerospace Ltd

W/O:		WORK ORDER CHANGES					
DATE	STEP	PROCEDURE CHANGE	By	Date	Qty	Approval Chief Eng / Prod Mgr	Approval QC Inspector

Part No: _____ **PAR #:** _____ **Fault Category:** _____ **NCR:** Yes No **DQA:** _____ **Date:** _____

Resolution: _____ **Disposition:** _____ **QA: N/C Closed:** _____ **Date:** _____

NCR:		WORK ORDER NON-CONFORMANCE (NCR)						
DATE	STEP	Description of NC Section A	Corrective Action Section B			Verification Section C	Approval Chief Eng	Approval QC Inspector
			Initial Chief Eng	Action Description Chief Eng	Sign & Date			

NOTE: Date & initial all entries

H:\fFORMS\Quality Assurance\approved QA\NCRWO RevE

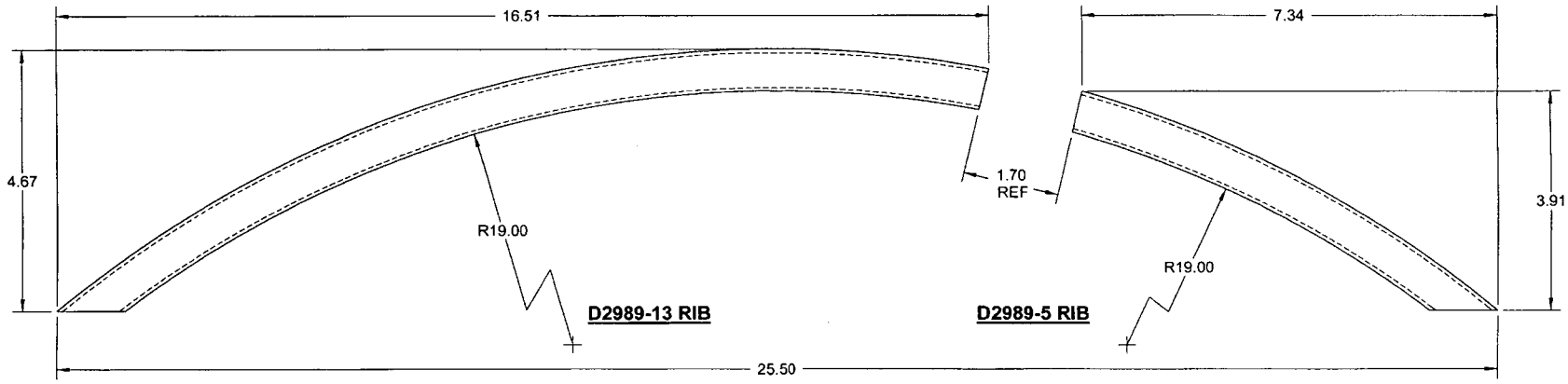

D2989-13 RIB

D2989-5 RIB

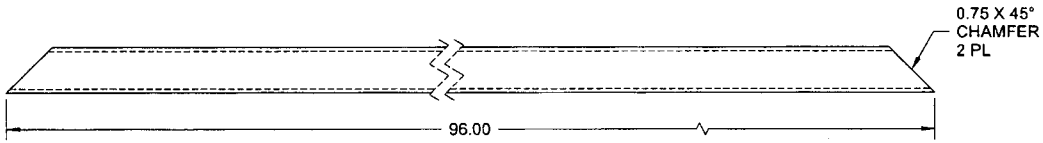

D2989-17 RIB

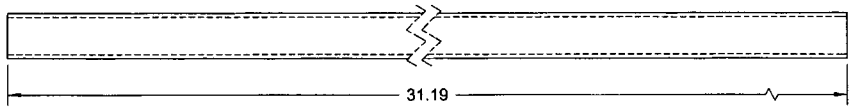

D2989-19 RIB

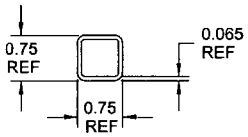

TYPICAL SECTION VIEW

w/o 61444

RELEASED 08/11/18 [illegible]

NOTES:
1) MATERIAL: AISI 304/316 STAINLESS STEEL SQUARE TUBE, 0.75 X 0.75 X 0.065 WALL
REF. DART SPEC. M304TS0.750W0.065
2) FINISH: NONE
3) TOLERANCES: PER DART QSI 018 UNLESS OTHERWISE NOTED
4) UNITS: INCHES UNLESS OTHERWISE NOTED
5) BREAK SHARP EDGES: 0.005 TO 0.010 MAX
6) IDENTIFICATION: N/A
8) WEIGHT: D2989-5 = 0.37 lbs; D2989-13 = 0.81 lbs; D2989-17 = 4.57 lbs; D2989-19 = 1.50 lbs

DESIGN	DS	**DART AEROSPACE LTD** HAWKESBURY, ONTARIO, CANADA
DRAWN		
CHECKED		DRAWING NO. D2989 — REV. D — SHEET 5 OF 5
MFG. APPR.		
APPROVED		TITLE: BASKET LID ASSEMBLY — SCALE: NTS
DE APPR.		
DATE	08.09.24	

COPYRIGHT © 2000 BY DART AEROSPACE LTD
THIS DOCUMENT IS PRIVATE AND CONFIDENTIAL AND IS SUPPLIED ON THE EXPRESS CONDITION THAT IT IS NOT TO BE USED FOR ANY PURPOSE OR COPIED OR COMMUNICATED TO ANY OTHER PERSON WITHOUT WRITTEN PERMISSION FROM DART AEROSPACE LTD

Dart Aerospace Ltd

W/O:		WORK ORDER CHANGES					
DATE	STEP	PROCEDURE CHANGE	By	Date	Qty	Approval Chief Eng / Prod Mgr	Approval QC Inspector

Part No: _____ **PAR #:** _____ **Fault Category:** _____ **NCR:** Yes No **DQA:** _____ **Date:** _____

Resolution: _____ **Disposition:** _____ **QA: N/C Closed:** _____ **Date:** _____

NCR:		WORK ORDER NON-CONFORMANCE (NCR)						
DATE	STEP	Description of NC Section A	Corrective Action Section B			Verification Section C	Approval Chief Eng	Approval QC Inspector
			Initial Chief Eng	Action Description Chief Eng	Sign & Date			

NOTE: Date & initial all entries

H:\FORMS\Quality Assurance\approved QA\NCRWO RevE